LuxR® LED BY DESIGN

M2 SPOT LIGHT

MADE IN NEW ZEALAND

<65°c CoolTouch | LEDShield | Thermaflux

5yr BODY WARRANTY ALUMINIUM | 10yr BODY WARRANTY COPPER - STAINLESS STEEL | 5yr ELECTRONICS WARRANTY | ECO | REPLACEABLE LED | MODULAR DESIGN | EASY INSTALL | LOW MAINTENANCE | NZ MADE

PRODUCT CONFIGURATION

Please fill in appropriate codes into boxes provided

Power: M2

- M2 — 2 Watt

Flange:

- SP — Spot
- GG — Glare Guard
- SN — Snoot

Driver:

- R — Remote (series)
- I* — Integral (12VAC)*
- I* — Integral (24VDC)*

*When ordering, please specify AC or DC options.

Material:

- C — Copper
- S — Stainless Steel
- A — Aluminium*
  - BK — Black
  - BZ — Bronze
  - W — White

*Please specify powder-coat colour when ordering an aluminium luminaire.

Beam:

- 26 — 26˚
- 36 — 36˚
- 74 — 74˚

Colour:

- 27 — 2700K
- 30 — 3000K
- 40 — 4000K
- R — Red
- G — Green
- B — Blue
- A — Amber

Accessories:

- F — Frosted
- H — Hexcell
- B — Bracket
- BS — Bracket & Spike
- TM — Tree Mount Bracket
- ST — Bracket & Stake
- GS — Glare Shield
- WB — Weighted Base*

*not available in aluminium

SPECIFICATIONS

c UL us LISTED | III | PART L | IP68 | CE

Power	2 Watt
Ingress Protection Rating	IP68
Cable	H05RN-F 2x 0.75mm (1m)
Material	- Black/ White/Bronze Powdercoated Aluminum - Natural Copper - 316 Stainless Steel
Lens Options	Clear or Frosted
Hexcell Louvre	Hexcell Louvre available
Colour Temperature Options	Warm White - 2700K and 3000K Neutral White - 4000k
Removable Light Engine (LED)	Screw Mounted 2W Cree™ XPG-3 Chip
Optic Degrees	26°, 36°, 74°
CRI	90+ CRI
Efficiency	85lm/w - Delivered from Luminaire with unobstructed beam
Input Options	700mA Constant current (Remote) 12V AC (Integral) 24V DC (Integral)
Warranty	Electronics Warranty - 5 Years Aluminum Body - 5 Years Copy and Stainless Steel Body Warranty - 10 Years
LED Shield	LED Bypass Shunt LED Reverse Polarity Protection
LED Life Expectancy	50,000 Hours

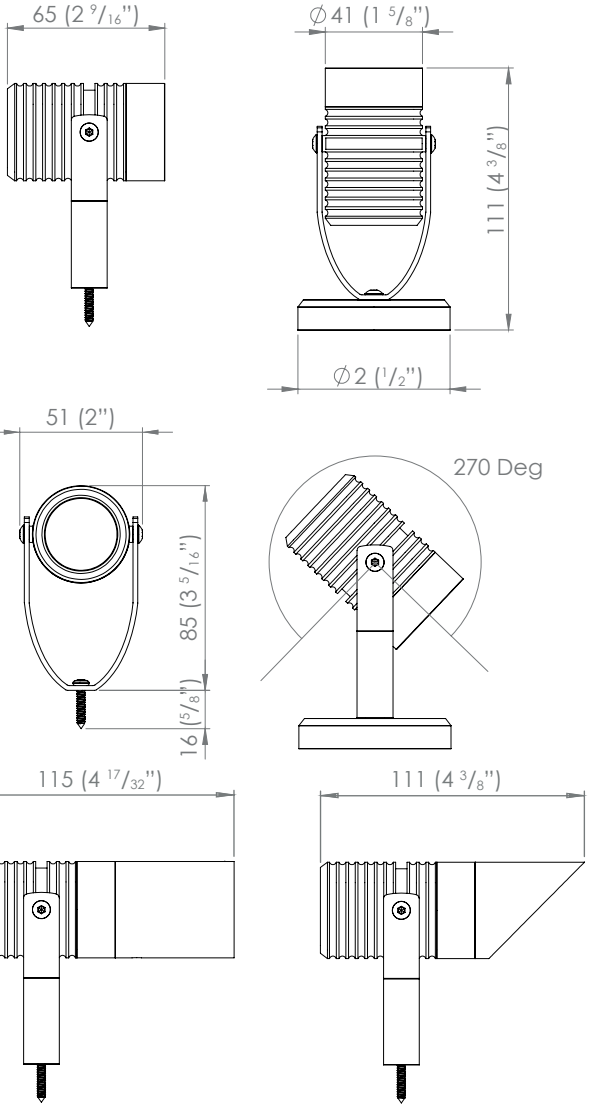

V5
Jul 2022

130 Felton Mathew Ave
St Johns, Auckland 1072
New Zealand
+64 9 528 9471
www.luxrled.com

Copyright 2022 LuxR® Limited
*Due to continued product enhancements, specifications may change without notification.